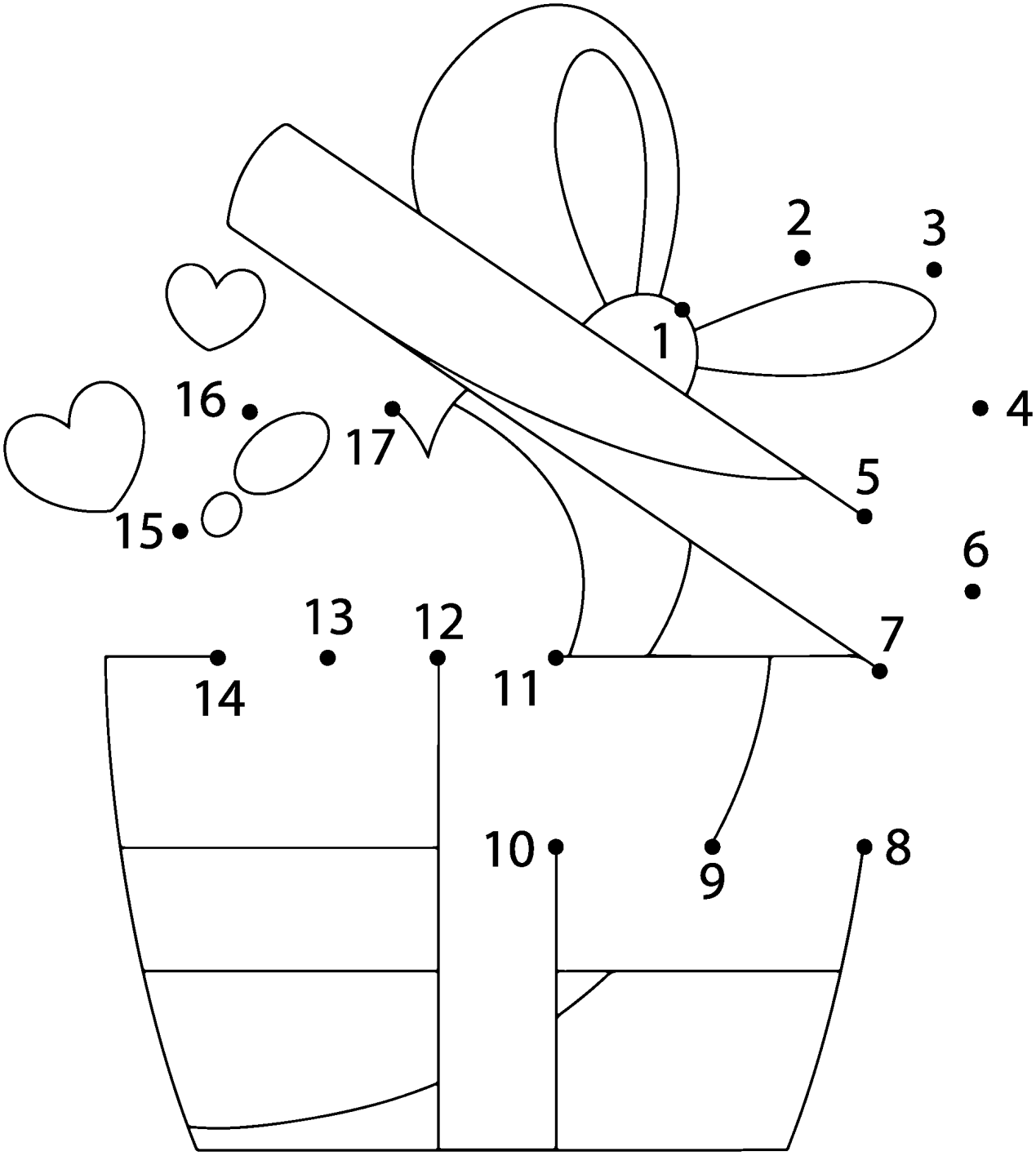CONNECT THE DOTS